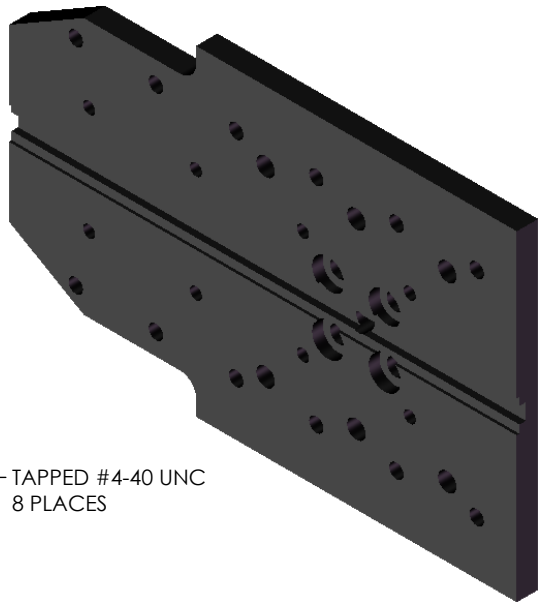

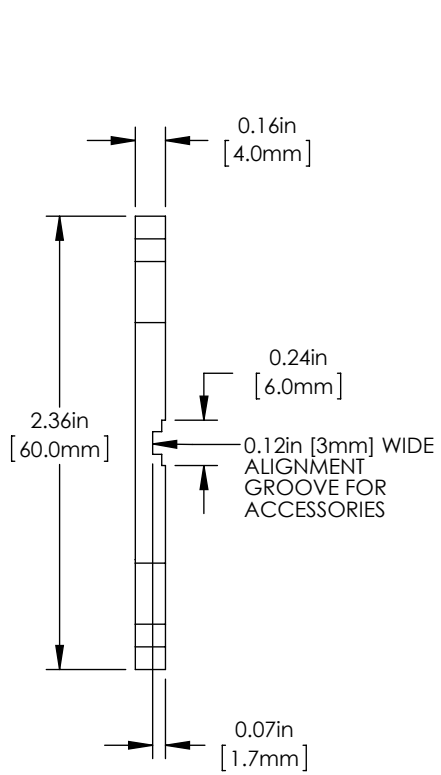

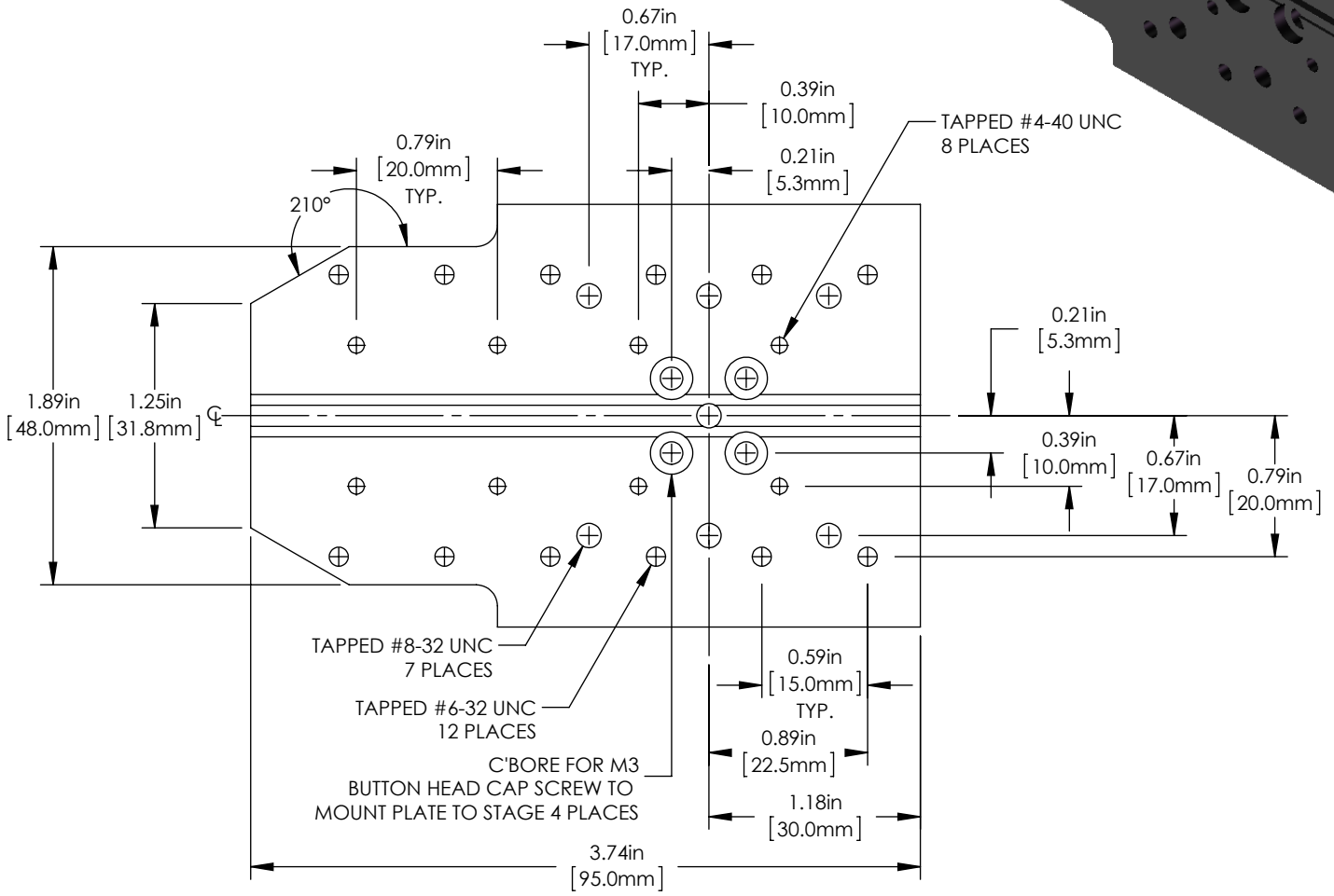

FOR INFORMATION ONLY
NOT FOR MANUFACTURING PURPOSES

DRAWING PROJECTION

	NAME	DATE
DRAWN	AH	03/FEB/15
APPROVAL	DC	03/FEB/15

COPYRIGHT © 2013 BY THORLABS

VALUES IN PARENTHESIS ARE CALCULATED AND MAY CONTAIN ROUNDOFF ERRORS

THORLABS
www.thorlabs.com

95mm EXTENDED PLATFORM FOR NANOMAX300 & MICROBLOCK

MATERIAL: ANODIZED ALUMINIUM
REV: C

ITEM #: AMA003
APPROX WEIGHT: 0.05 kg