


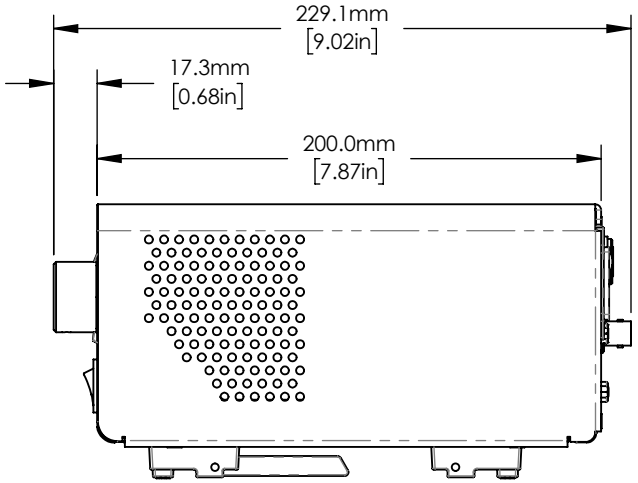


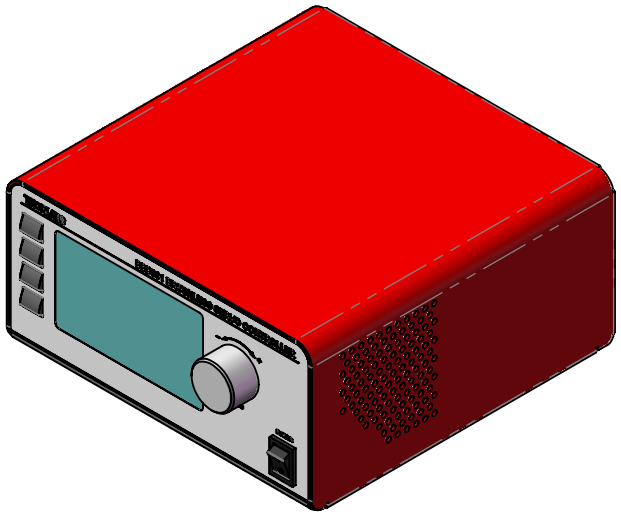

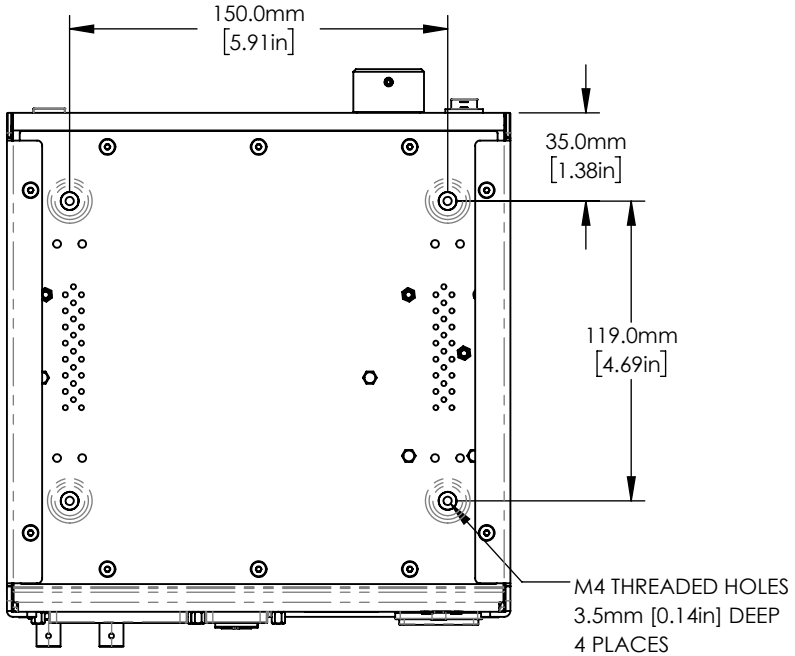


VIEW SHOWN WITH REMOVED FEET

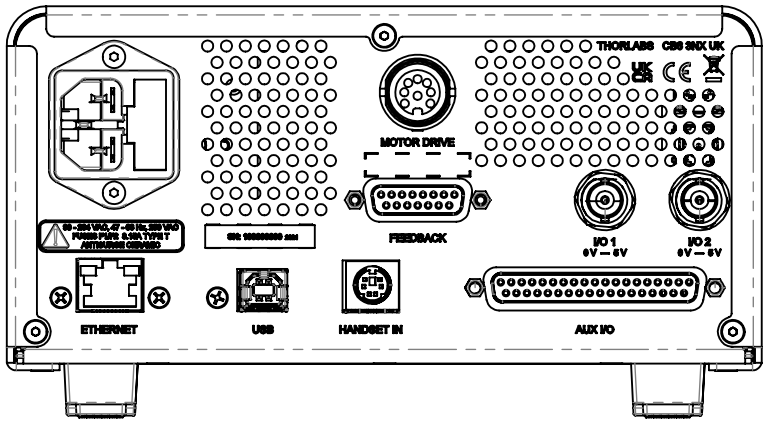


REAR VIEW

FOR INFORMATION ONLY
NOT FOR MANUFACTURING PURPOSES

| DRAWING PROJECTION | | |
|---|---|---|
| | NAME | DATE |
| DRAWN | SP | 28/FEB/21 |
| APPROVAL | IK | 28/FEB/21 |

COPYRIGHT © 2021 BY THORLABS

VALUES IN PARENTHESIS ARE CALCULATED AND MAY CONTAIN ROUND OFF ERRORS

THORLABS
www.thorlabs.com

1 CHANNEL BRUSHLESS CONTROLLER

| MATERIAL | REV |
|---|---|
| N/A | A |

| ITEM # | APPROX WEIGHT |
|---|---|
| BBD301 | 1.2 kg |